INSTALLATION MANUAL

ARMORGUARD® PERMANENT STEEL BARRIER GATE

NCHRP 350 TL-3 Longitudinal Steel Barrier Gate

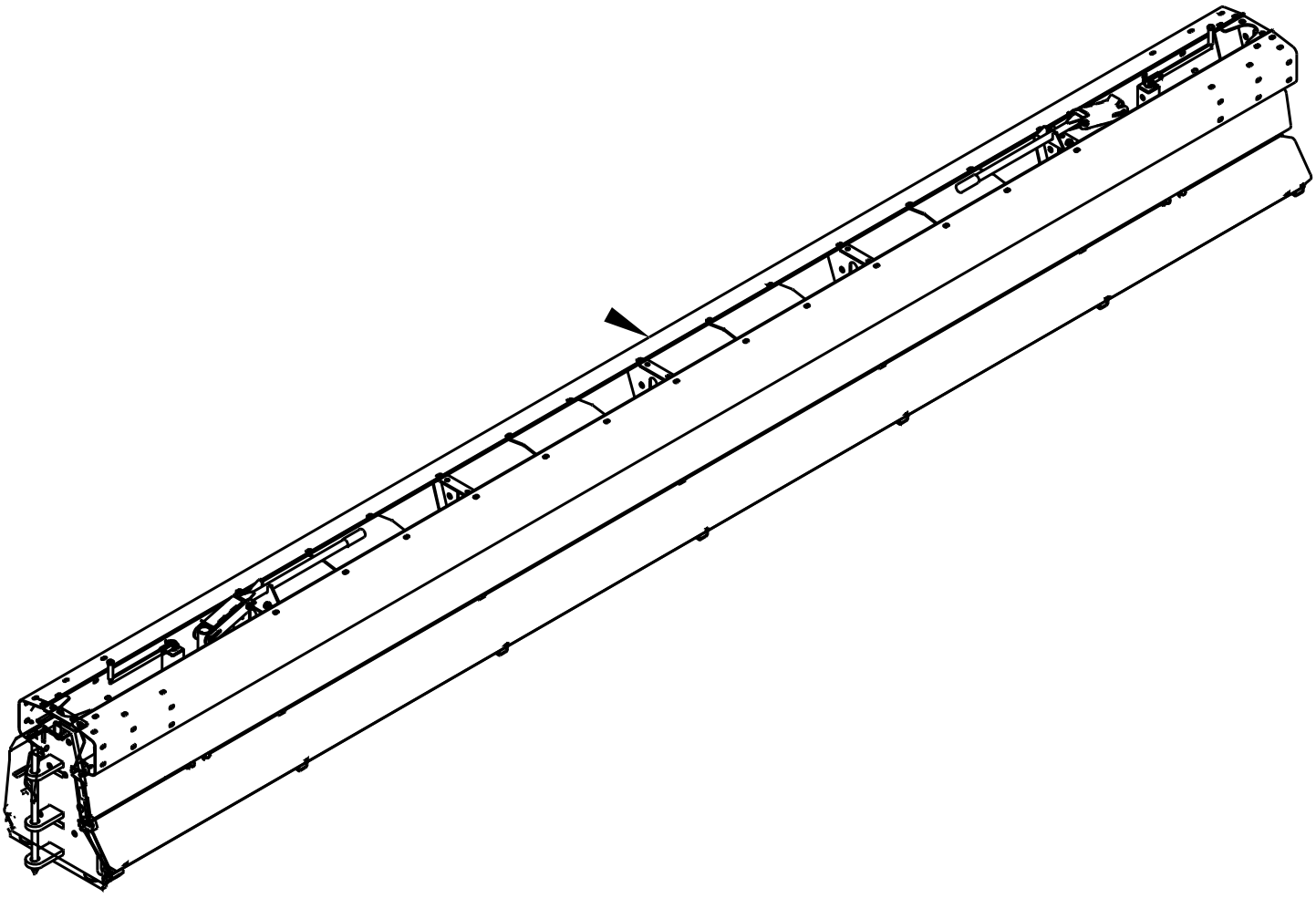

BARRIER SYSTEMS®
BY LINDSAY

ArmorGuard® Gate System
Section Splice and Transition Installation Instructions

Table of Contents

Preface	2
Introduction	2
System Overview	3
Required Tools	3
Section Splicing Instructions	4
Transition Installation Instruction	8
Limitations and Warnings	14
Warranty	15

Appendix

A. Anchoring Material Options	16
B. Anchoring Foundation and Barrier Cutout	17
C. System Assembly Drawings	19
D. Maintenance	30

PREFACE

The Barrier Systems ArmorGuard Gate System (AGG), incorporates the newest roadside safety materials and engineering processes.
As with any roadside safety device, the AGG must be installed properly to insure proper performance. Thoroughly review and fully understand the installation instructions and product limitations before starting the installation. An instructional video is available from BSI to help explain the general installation requirements. Watch and fully understand the AGG *Section Splice and Hinge / Transition Installation and Assembly Video* before attempting to install the system. Do not start the installation without the proper plans and tools required for installation.

If you need additional information, or have questions about the ArmorGuard Gate System, please call the Lindsay Transportation Solutions Sales and Services, Inc Customer Service Department at (888) 800-3691 (U.S toll free) or (707) 374-6800.

INTRODUCTION

The AGG has been fully tested in accordance with the evaluation parameters in NCHRP Report 350, Test Levels 3 (100 km/hr).

The system is a heavily reinforced steel barrier that is designed for emergency openings. It is ideally suited for permanent and stationary work zone barriers where emergency vehicles, maintenance crews and emergency evacuation access may be needed and positive barrier protection is required.

The system should be installed on a smooth firm surface that is capable of supporting the weight of the system. Generally a Portland Concrete Cement (PCC) surface is preferred but the system has been successfully installed and used on an Asphaltic Concrete surface. Please refer to Appendix B (Page 17).

SYSTEM OVERVIEW

Longitudinal barriers are highway safety devices whose primary functions are to prevent vehicular penetration and to safely redirect an errant vehicle away from roadside or median hazards. The ArmorGuard Gate system is used as a moveable longitudinal barrier section that can be installed in openings of rigid barrier systems. The system is hinged at both ends and uses a compressed air powered jacking system or manual jack system to raise the gate section onto casters. This enables the system to be unhinged and swung open from either end, or the whole gate section can be disconnected at both ends and moved in any direction. The purpose of the system is to create a crashworthy closure for rigid longitudinal barrier openings that is capable of being opened by no more than two people in less than 5 minutes.

The system is approximately 28 inches (700 mm) wide and is 33 inches (830 mm) high. It is available in 4-meter (13') increments from 8 meters to 16 meters (26 to 52 feet) in length. The system can be quickly and easily opened or closed without expensive electrical power supplies or sophisticated control systems. Positive security can also be provided.

REQUIRED TOOLS

1/2" (12 mm) medium depth sockets

1/2" (12 mm) Ratchet with extensions

Rotohammer for drilling holes in concrete

Torque wrenches

Measuring tape

Safety Equipment: Glasses, Gloves

1/2" (12 mm) Air impact wrench w/ sockets

Note: The tools list above is a general recommendation. Depending on the specific characteristics of the job site, different tools may be necessary.

BEFORE INSTALLATION

Placement and use of the ArmorGuard Gate System should be accomplished in accordance with the guidelines and recommendations set forth in the "AASHTO Roadside Design Guide," FHWA memoranda and other state and local standards.

The AGG is a highly engineered safety device made up of a relatively small number of parts. Before starting the assembly, become familiar with the basic elements that make up the system.

Depending on the size of the system ordered, the gate sections will be shipped separately and the transition parts will be shipped on pallets. Assembly of the system is typically done at the worksite. (If preferred, the system can be assembled "off-site" and set into position as one piece, with a forklift or crane.)

8 and 12 meter gates are shipped fully assembled. 16 meter gates are shipped in (2) 8-meter sections with transitions on pallets.

Before beginning the assembly of the system, check the packing list to be certain that all of the system components were included in the shipment.

NOTE:
It is important to determine the system's installation position to optimize proper function and transition.

SECTION SPLICING INSTRUCTIONS

Depending on the length of the system ordered, the gate sections may need to be spliced together. The first part of this manual describes the process for splicing two AGG sections together. This procedure can also be used to replace a damaged 4-meter section.

The transition to permanent concrete barrier hardware installation instructions start on page 8.

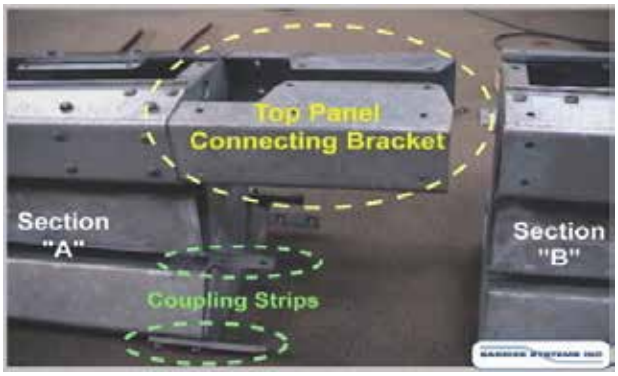

Figure 1.

For the sake of this manual, we will assume that two sections have been delivered and laid out in this orientation with the section on the left labeled Section “A” and the one on the right as Section “B”. The Top Panel Connecting Brackets are already installed on Section “A”. This manual will show you how to splice the two sections together with the Top Panel Connecting Bracket.

Figure 2.

Step 1
Remove the Coupling Straps from both sides of Section “A”. Use an impact wrench to remove the middle and upper Coupling Straps. Use a wrench or socket to remove the bottom coupling Strap. The bolts that attach the Side Coupling Straps screw into the Threaded Backing Plate (fig 3.) located on the inside of the assembly.

Figure 3.

Notice (Fig 4.) that the Bottom Coupling Straps are different from the Side Coupling Straps as the areas around the holes are cut out so that the Strap can be installed flush over the panel mounting nuts.

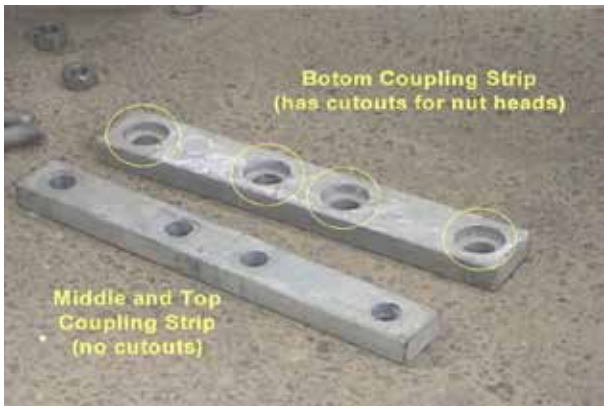

Figure 4.

Figure 5.

Step 2
Remove any bolts in the Top Panel of Section “B”. Insert a pry bar into adjacent holes to move the panels around so that the bolts can be easily removed.

Figure 6.

Step 3
Once all of the bolts on the Section “B” Top Panel are removed, you are ready to insert the Top Panel Connecting Bracket under the top panels of Section “B”.
Use a pry-bar (figure 6) to make sure that the unit is aligned and that the top panel on Section “B” will go over the connecting hardware.

Figure 7.

NOTE: Before pushing on the end of Section “B”, place a spacer block on the hinge assembly (figure 7). This will prevent the forklift or other pushing device from contacting and possibly damaging the hinge bars.

Figure 8.

Step 4
Push on the end of Section “B” moving the Top Panels over the Top Panel Connecting Bracket on Section “A”. (figure 8.)

Figure 9.

Step 5
Use a pry bar to align the side panels so that the Bottom Coupling Strap can be re-installed. Make sure that the Bottom Coupling Strap is used and that the cutouts fit over the nut heads on the outside of the unit. Install the washers and nuts and tighten to 70 ft-lbs (95 N-m).

Figure 10.

Step 6
Install the Side Coupling Straps. One person must hold the Threaded Backing Plate on the inside on the unit, while the other person threads the bolt thru the Side Coupling Strap, the End Cap, and then into the Coupling Strap Nut.

Figure 11.

Step 7
Use a pry bar to align the holes on the Top Panel and re-install the bolts (figure 11.). Refer to drawing #B010343 in the Appendix C (Page 26) to determine the position of the round head bolts and the hex head bolts.

Figure 12.

Step 8
Occasionally after the top bolts have been installed on the Top Panel, the side of the Top Panel will pull away from the assembly. Use a longer hex bolt to temporarily pull the side of the panel in. Install the hex bolt. Keep the holes aligned with the pry bar while tightening (figure 12).

Figure 13.

Step 9
Replace the rest of the side bolts. When all of the side bolts have been replaced, remove the hex bolt and replace it with a Round Head bolt.

The Round Head bolts will eliminate any vehicle snagging if the system is impacted.

Figure 14.

Step 10
Finish attaching the top panel by installing the bolts on the bottom side of the Top Panel.

Figure 15.

Step 11
Use and impact wrench to tighten all of the side Coupling Strap bolts (figure 15).

Figure 16.

Step 12
Next, install the Middle Panel Connecting Rods (figure 16). These rods connect the Middle Panels of adjacent 4-meter sections. Install the washer and nut, and tighten with an impact wrench.

Figure 17.

Step 13
Once the Middle Panel Connecting Rods have been installed, the Coupling Shear Plate can be installed. The Coupling Shear Plate attaches across the tops of the two sections (figure 17). Tighten all of the bolts with an impact wrench.

TRANSITION INSTALLATION INSTRUCTIONS

The transition hardware for the ArmorGuard Gate System (AGG) will be delivered on pallets along with the gate. When requested, and shipping conditions allow, the transition will be shipped partially assembled.

These are the procedures for installing a AGG transition to a permanent concrete safety shaped barrier. The transition hardware consists of a number of parts that must be installed onto the permanent barrier in a particular sequence.

This is a view of the major components that make up the AGG transition to permanent concrete barrier. The components are shown above and to the right.

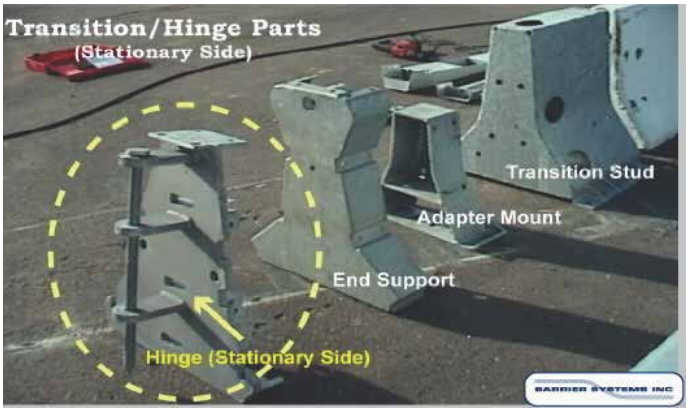

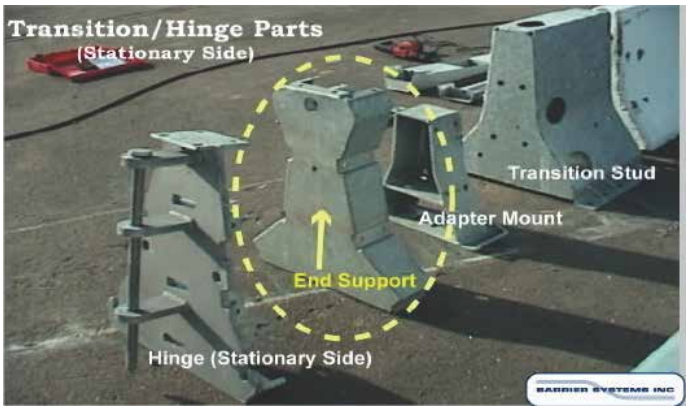

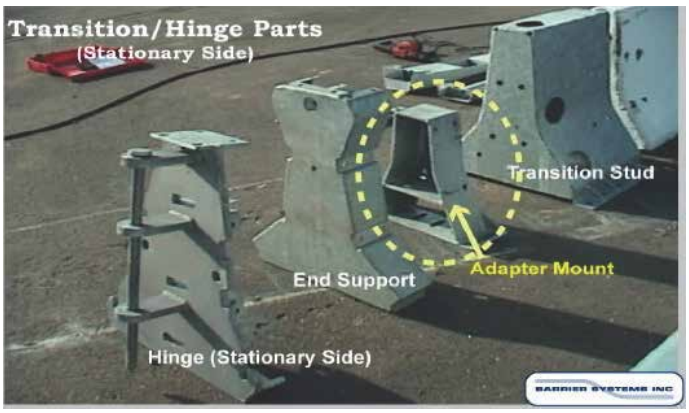

Figure 26.

Step 1
Slide the Transition Housing over the end of the permanent barrier. A pry bar should easily move the part into place. A forklift could also be used to push the part into place. Center the Gate and transitions within the predetermined opening, as described in Drawing B011025 (page 18).

Figure 27.

Step 2
Use the holes in the Transition Housing as a template for marking the position of the anchor holes that will be drilled. Also, mark the holes at the base of the Transition Housing.

Figure 28.

Step 3
Drill the holes for the Transition Housing side and bottom (Figure 28).

Figure 30.

Step 4
Insert the enclosed threaded rods into the holes and epoxy in place as directed by instructions enclosed with the epoxy.

Figure 31.

Step 5
After the anchor epoxy has properly cured, place the washer and nuts on the Housings and tighten. Torque to 120 ft/lbs.

Figure 32.

Install the Adapter Mount assembly over the Housings coming up through the top of the Spacer Plate and against the Transition Housing. Make sure that the Housings that come up through the Spacer Plate are aligned so that they come up through the bottom plate of the Adapter Mount.

Step 6

Figure 33.

Step 7
Install the bolts that hold the Adapter Plate against the Transition Housing by inserting the washers and bolts. Use the access holes on the side of the Transition Housing to install the nuts and lock washers on the bolts. Use the access hole to hold a back-up on the nuts while the bolts are tightened with an impact wrench.

Figure 34.

Step 8
Install the nuts and washers onto the Housings that come up through the Spacer Plate and through the bottom of the Adapter Plate.

Figure 35.

Step 9
Install the End Support over the Adapter Mount. The End Support will slide over and around the adapter.

Figure 36.

Step 10

Install the nuts and washers onto the Housings that come up through the Spacer Plate and through the bottom of the Adapter Plate.
At this point, start attaching the side transition panels that run back from the Hinge back onto the concrete barrier. Install the bottom panel first. One person has to hold the panel in place while another person installs the Bottom Coupling Strap. The bolts thread directly into the sides of the End Support.

Figure 37.

Step 11
Follow the same steps to install the middle panel. (The middle panel is different from the bottom panel in that it has an insert. The insert will be used to connect a thru-rod later in the process).

Figure 38.

Step 12
Finally the top rail is installed. It is easiest if two people hold the top rail in place while the third person installs the bolts.

Figure 39.

Step 13
Install the two Round Head bolts in the top side of the Top Panel and hand tighten the nuts.

Figure 40.

Step 14
Install the Top Coupling Strap between the middle and top panel. DON'T TIGHTEN any of the coupling Strap bolts at this time.

Figure 41.

Step 15
Next install the Hinge Assembly. Slide the tabs on the Hinge Assembly inside the Coupling Straps (see Fig. 41 and 42)

Figure 42.

Figure 43.

Step 16
Install and tighten the bolts that attach the lower, (Figure 42) middle and top (Figure 43) coupling Straps to the Hinge Assembly.

Figure 44.

Step 17
Thread the Middle Panel Thru Rod into the Middle Transition Panel until 2 nut lengths of thread extend beyond the flange of the Hinge Assembly. Install the nut and washer and tighten with a torque wrench.

Figure 45.

Step 18
Drill the holes through the transition panels into the permanent concrete barrier. Insert the Housings into the holes and epoxy in place. After the epoxy has properly cured, install the nuts and washers and torque to 120 ft-lbs (160 N-m).

Limitations and Warnings

The ArmorGuard Gate system has been rigorously tested and evaluated per the recommendations in the NCHRP Report 350 Guidelines for Test Level 3 (TL-3) longitudinal barriers. The impact conditions recommended in NCHRP 350 are intended to address typical in-service collisions.

When the ArmorGuard Gate system is properly installed and maintained, the system is capable of redirecting impacting vehicles in a predictable and safe manner under the NCHRP 350 impact conditions of:

Vehicles: Pickup (2000P) and small car (820C)

Mass: 4400 lbs. (2000 kg) & 1800 lbs. (820 kg)

Speed: 62 mph (100 km/hr)

Angle: 25 degrees for pickup and 20 degrees for small car

Vehicle impacts that vary from the NCHRP 350 impact conditions described for longitudinal barriers may result in significantly different results than those experienced in testing. Vehicle impact characteristics different than or in excess of those encountered in NCHRP 350 testing (speed and angle) may result in system performance that may not meet the NCHRP 350 evaluation criteria.

Warranty

LINDSAY™ TRANSPORTATION SOLUTIONS

STANDARD LIMITED WARRANTY

Lindsay Transportation Solutions, Inc. "LTS" (formerly Barrier Systems) has tested the impact performance of its barriers and crash cushion systems, and other highway safety hardware under controlled conditions, however, LTS does not represent nor warrant that the results of those controlled conditions would necessarily avoid injury to persons or property. LTS EXPRESSLY DISCLAIMS ANY WARRANTY OR LIABILITY FOR CLAIMS ARISING BY REASONS OF DEATH OR PERSONAL INJURY OR DAMAGE TO PROPERTY RESULTING FROM ANY IMPACT, COLLISION OR HARMFUL CONTACT WITH THE PRODUCTS OR NEARBY HAZARDS OR OBJECTS BY ANY VEHICLE, OBJECTS OR PERSONS.

LTS warrants that any product or component part manufactured by LTS will be free from defects in material or workmanship. LTS will replace free of cost any Product or component part manufactured by LTS that contains such a defect.

THE FOREGOING WARRANTY IS IN LIEU OF AND EXCLUDES ALL OTHER WARRANTIES NOT EXPRESSLY SET FORTH HEREIN, WHETHER EXPRESS OR IMPLIED BY OPERATION OF LAW OR OTHERWISE, INCLUDING BUT NOT LIMITED TO ANY IMPLIED WARRANTIES OF MERCHANTABILITY OR FITNESS FOR A PARTICULAR PURPOSE.

LTS' LIABILITY UNDER THIS WARRANTY IS EXPRESSLY LIMITED TO REPLACEMENT FREE OF COST (IN THE FORM AND UNDER THE TERMS ORIGINALLY SHIPPED), OR TO REPAIR OR TO MANUFACTURE BY LTS, PRODUCTS OR PARTS NOT COMPLYING WITH LTS SPECIFICATIONS, OR, AT LTS' ELECTION, TO THE REPAYMENT OF AN AMOUNT EQUAL TO THE PURCHASE PRICE OF SUCH PRODUCTS OR PARTS, WHETHER SUCH CLAIMS ARE FOR BREACH OF WARRANTY OR NEGLIGENCE. LTS SHALL NOT BE LIABLE FOR ANY INCIDENTAL, CONSEQUENTIAL OR SPECIAL LOSSES, DAMAGES OR EXPENSES OF ANY KIND, INCLUDING, WITHOUT LIMITATION, ANY SUCH LOSSES, DAMAGES OR EXPENSES ARISING DIRECTLY OR INDIRECTLY FROM THE SALE, HANDLING OR USE OF THE PRODUCTS FROM ANY OTHER CAUSE RELATING THERETO, OR FROM PERSONAL INJURY OR LOSS OF PROFIT.

Any claim by the Buyer with reference to Products sold hereunder for any cause shall be deemed waived by the Buyer unless LTS is notified in writing, in the case of defects apparent on visual inspection, within ninety (90) days from the delivery date, or, in the case of defects not apparent on visual inspection, within twelve (12) months from the said delivery date. Products claimed to be defective may be returned prepaid to LTS' plant for inspection in accordance with return shipping instructions that LTS shall furnish to the Buyer forthwith upon receipt of the Buyer's notice of claim. If the claim is established, LTS will reimburse that Buyer for all carriage costs incurred hereunder.

The forgoing warranty benefits shall not apply to (i) any Products that have been subject to improper storage, accident, misuse or unauthorized alterations, or that have not been installed, operated and maintained in accordance with approved procedures and (ii) any components manufactured by the Buyer.

W030587 Rev. 8 revised February 4, 2013

BARRIER SYSTEMS · RAILROAD PRODUCTS · SNOLINE

180 River Road • Rio Vista, CA 94571 • Tel. +1 (707) 374-6800 • Fax. +1 (707) 374-6801

APPENDIX A
Anchoring Material Options

The anchoring package supplied with the ArmorGuard Gate system contains the necessary threaded rods and epoxy needed to install the system. (Fosroc Anchortite Polyester Epoxy and galvanized or stainless steel threaded rods ¾" (20 mm) cut to length.) The epoxy has the following physical properties:

Compressive Strength, ASTM C-109 (7 days):
14,000 psi (97 MPa)

Tensile Strength, ASTM C-307 (7days):
2,000 psi (14 MPa)

Heat Distortion, Temperature, ASTM D-648:
233°F (112°C)

Coefficient of Linear Expansion:
2.55 x 10^5/°C

The proper ratio of filler/hardener to **resin** is two parts of filler/hardener to one part resin by volume.

Anchor bolt holes should be drilled using air-flushed or water-flushed rotary percussive drilling equipment. If diamond core or non-percussive drills are used, the hole must be thoroughly scoured using a coarse wire flue brush.

Other anchoring materials can be used if they comply with the following specifications: epoxy should meet the ASTM C307 tensile strength of 2,000 psi (14 MPa) and compressive strength of 10,000 psi (70 MPa) per ASTM C109 or C579. The anchoring compound (epoxy) should provide a pull out strength of 20,000 lb. (9070 kg) minimum in 4,000 psi (28 MPa) concrete. Products such as HILTI HIT HY150 injection Adhesive Anchor or HVA Adhesive Anchoring System fit this criteria.

If mechanical expansion anchors are provided with the P.C.B. anchoring package, they can be replaced with any corrosion resistant mechanical or chemical anchor that provides a shear capacity of at least 30,000 lb. (13607 KG) and a tensile capacity of at least 20,000 lb. (9070 KG), in 4,000 psi (28MPa) concrete. Appropriate sized threaded rod and specified epoxy can also be substituted.

For additional information regarding this product, please contact:

Lindsay Transportation Solutions Sales and Services, Inc.
180 River Road
Rio Vista, CA 94571

U.S. Toll Free (888) 800-3691
Phone: (707) 374-6800
Fax: (707) 374-6801

APPENDIX B

Anchoring Foundation and Barrier Cutout

Placement and installation of the ArmorGuard Gate system must be accomplished in accordance with the guidelines and recommendations set forth in the "AASHTO Roadside Design Guide," FHWA memoranda and other state and local standards.

Foundation Detail,
Transition to New Jersey Shaped P.C.B.
Drawing # B011025 …… **Page 18**

For additional information regarding this product, please contact:

Lindsay Transportation Solutions Sales and Services, Inc.
Customer Service Department
180 River Road
Rio Vista, CA 94571

U.S. Toll Free (888) 800-3691
Phone: (707) 374-6800
Fax: (707) 374-6801

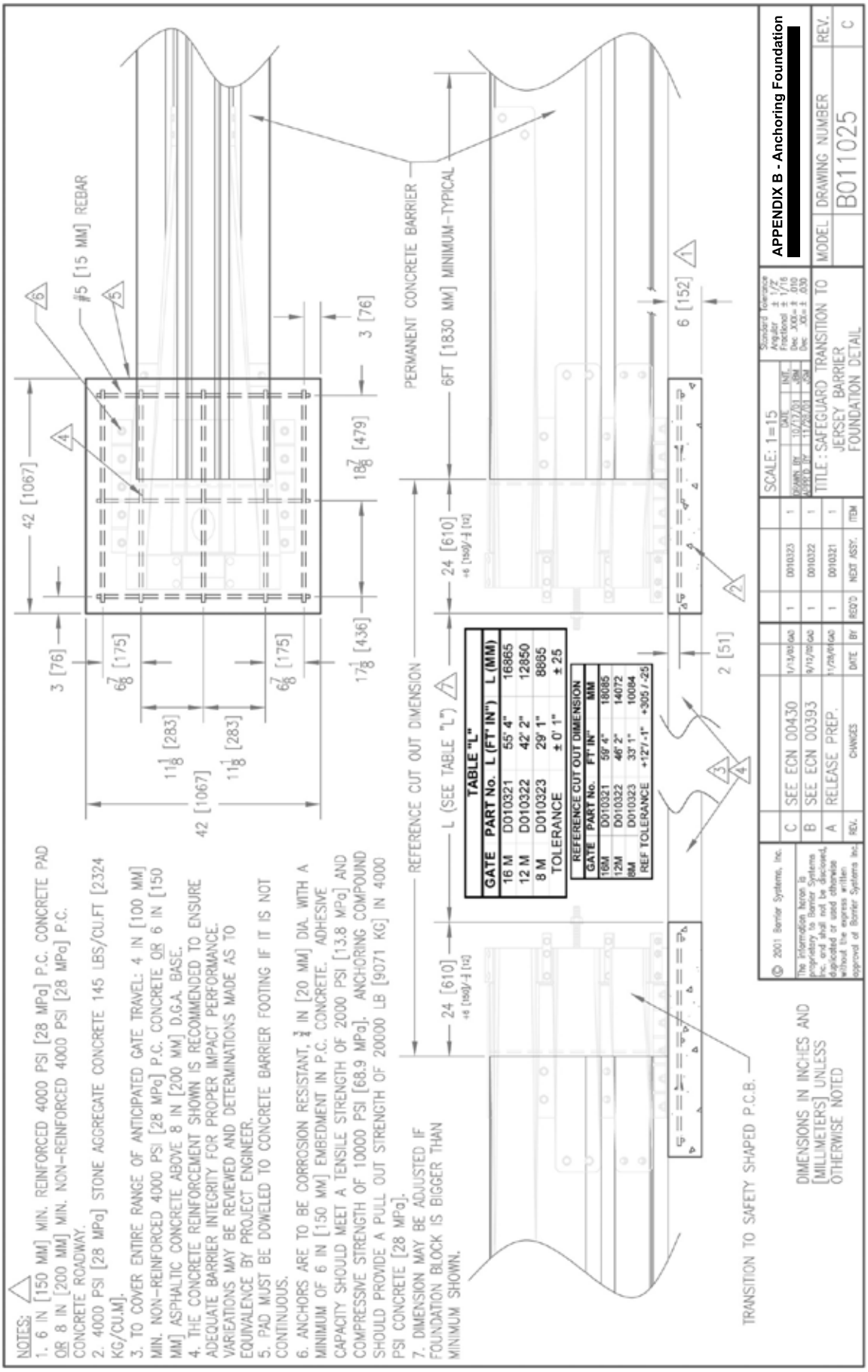
NOTES:
1. 6 IN [150 MM] MIN. REINFORCED 4000 PSI [28 MPa] P.C. CONCRETE PAD OR 8 IN [200 MM] MIN. NON-REINFORCED 4000 PSI [28 MPa] P.C. CONCRETE ROADWAY.
2. 4000 PSI [28 MPa] STONE AGGREGATE CONCRETE 145 LBS/CU.FT [2324 KG/CU.M].
3. TO COVER ENTIRE RANGE OF ANTICIPATED GATE TRAVEL: 4 IN [100 MM] MIN. NON-REINFORCED 4000 PSI [28 MPa] P.C. CONCRETE OR 6 IN [150 MM] ASPHALTIC CONCRETE ABOVE 8 IN [200 MM] D.G.A. BASE.
4. THE CONCRETE REINFORCEMENT SHOWN IS RECOMMENDED TO ENSURE ADEQUATE BARRIER INTEGRITY FOR PROPER IMPACT PERFORMANCE. VARIEATIONS MAY BE REVIEWED AND DETERMINATIONS MADE AS TO EQUIVALENCE BY PROJECT ENGINEER.
5. PAD MUST BE DOWELED TO CONCRETE BARRIER FOOTING IF IT IS NOT CONTINUOUS.
6. ANCHORS ARE TO BE CORROSION RESISTANT, 3/4 IN [20 MM] DIA. WITH A MINIMUM OF 6 IN [150 MM] EMBEDMENT IN P.C. CONCRETE. ADHESIVE CAPACITY SHOULD MEET A TENSILE STRENGTH OF 2000 PSI [13.8 MPa] AND COMPRESSIVE STRENGTH OF 10000 PSI [68.9 MPa]. ANCHORING COMPOUND SHOULD PROVIDE A PULL OUT STRENGTH OF 20000 LB [9071 KG] IN 4000 PSI CONCRETE [28 MPa].
7. DIMENSION MAY BE ADJUSTED IF FOUNDATION BLOCK IS BIGGER THAN MINIMUM SHOWN.
#5 [15 MM] REBAR
42 [1067]
3 [76]
6 7/8 [175]
11 1/8 [283]
17 1/8 [436]
18 7/8 [479]
PERMANENT CONCRETE BARRIER
6FT [1830 MM] MINIMUM-TYPICAL
REFERENCE CUT OUT DIMENSION
L (SEE TABLE "L")
24 [610]
6 [152]
2 [51]
TRANSITION TO SAFETY SHAPED P.C.B.
DIMENSIONS IN INCHES AND [MILLIMETERS] UNLESS OTHERWISE NOTED
TABLE "L"
GATE PART No. L (FT' IN") L (MM)
16 M D010321 55' 4" 16865
12 M D010322 42' 2" 12850
8 M D010323 29' 1" 8865
TOLERANCE ± 0' 1" ± 25
REFERENCE CUT OUT DIMENSION
GATE PART No. FT' IN" MM
16M D010321 59' 4" 18085
12M D010322 46' 2" 14072
8M D010323 33' 1" 10084
REF TOLERANCE +12'/-1" +305 / -25
C SEE ECN 00430
B SEE ECN 00393
A RELEASE PREP.
REV. CHANGES DATE BY REQ'D NEXT ASSY. ITEM
© 2001 Barrier Systems, Inc.
The information herein is proprietary to Barrier Systems Inc. and shall not be disclosed, duplicated or used otherwise without the express written approval of Barrier Systems Inc.
SCALE: 1=15
TITLE: SAFEGUARD TRANSITION TO JERSEY BARRIER FOUNDATION DETAIL
MODEL DRAWING NUMBER B011025
REV. C
APPENDIX B - Anchoring Foundation

APPENDIX C
System Assembly Drawings

Placement and installation of the ArmorGuard Gate system must be accomplished in accordance with the guidelines and recommendations set forth in the "AASHTO Roadside Design Guide," FHWA memoranda and other state and local standards.

16-Meter Manual Assembly
Drawing # 16AGMSAG1 **Page 20**

12-Meter Manual Assembly
Drawing # 12AGMSAG1 **Page 21**

8-Meter Manual Assembly
Drawing # 08AGMSAG1 **Page 22**

16-Meter Pneumatic Assembly
Drawing # 16AGPSAG1 **Page 23**

12-Meter Pneumatic Assembly
Drawing # 12AGPSAG1 **Page 24**

8-Meter Pneumatic Assembly
Drawing # 08AGPSAG1 **Page 25**

Hinge Mount Set
Drawing # B010342 **Page 26**

Coupling Set
Drawing # B010343 **Page 27**

Transition to New Jersey Shaped Barrier Assembly
Drawing # B010406 **Page 28**

Assembled Transition **Page 29**

For additional information regarding this product, please contact:

Lindsay Transportation Solutions Sales and Services, Inc.
Customer Service Department
180 River Road
Rio Vista, CA 94571

U.S. Toll Free (888) 800-3691
Phone: (707) 374-6800
Fax: (707) 374-6801

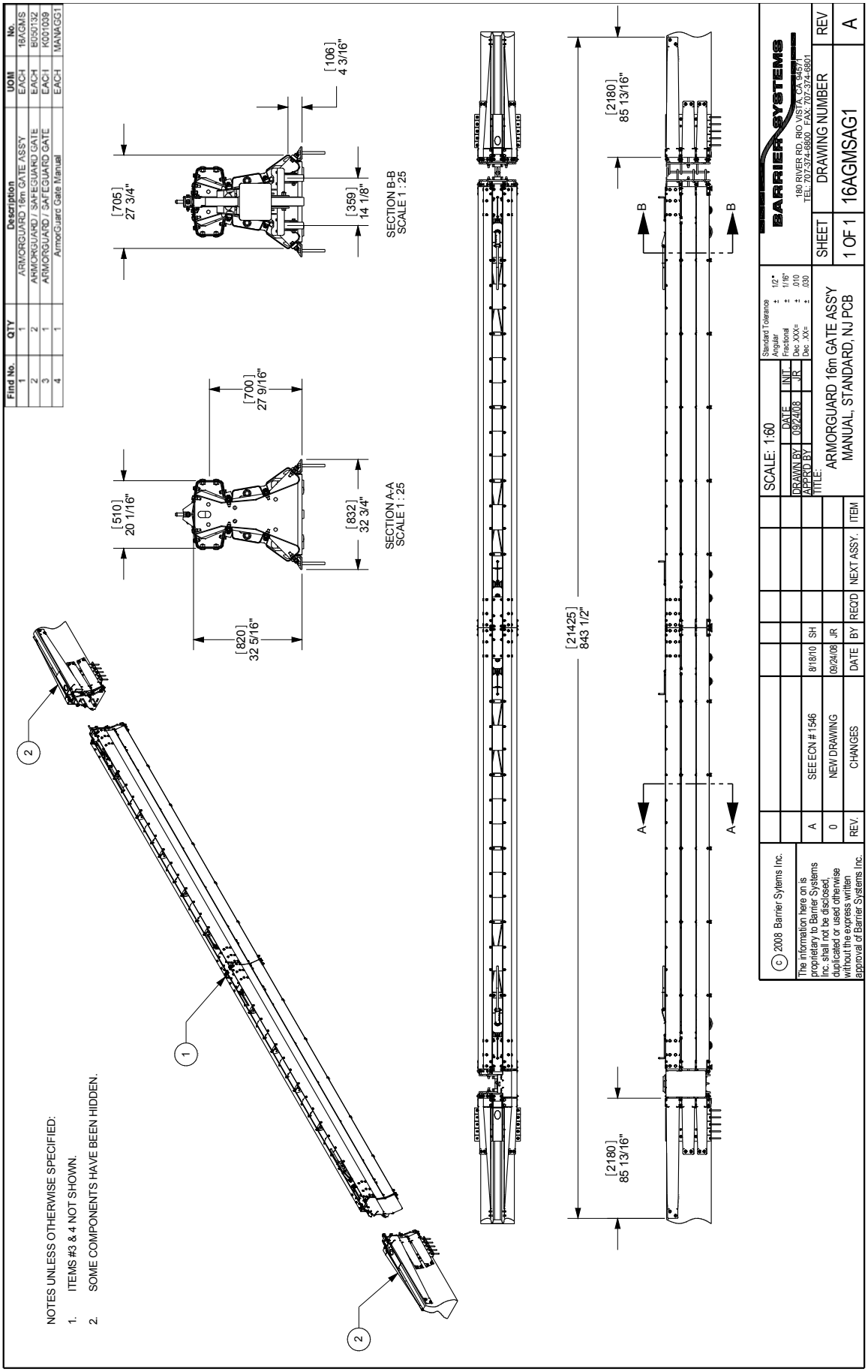
Find No. | QTY | Description | UOM | No.
1 | 1 | ARMORGUARD 16m GATE ASSY | EACH | 16AGMS
2 | 2 | ARMORGUARD / SAFEGUARD GATE | EACH | BD50132
3 | 1 | ARMORGUARD / SAFEGUARD GATE | EACH | K001039
4 | 1 | ArmorGuard Gate Manual | EACH | MANAGG1
[106] 4 3/16"
[705] 27 3/4"
[359] 14 1/8"
SECTION B-B SCALE 1 : 25
[700] 27 9/16"
[510] 20 1/16"
[832] 32 3/4"
[820] 32 5/16"
SECTION A-A SCALE 1 : 25
[2180] 85 13/16"
[21425] 843 1/2"
[2180] 85 13/16"
NOTES UNLESS OTHERWISE SPECIFIED:
1. ITEMS #3 & 4 NOT SHOWN.
2. SOME COMPONENTS HAVE BEEN HIDDEN.
SCALE: 1:60
DRAWN BY DATE INIT
09/24/08 JR
APPRD BY
TITLE:
ARMORGUARD 16m GATE ASSY
MANUAL, STANDARD, NJ PCB
Standard Tolerance
Angular ± 1/2°
Fractional ± 1/16"
Dec .XXX= ± .010
Dec .XX= ± .030
BARRIER SYSTEMS
180 RIVER RD, RIO VISTA, CA 94571
TEL: 707-374-6800 FAX: 707-374-6801
SHEET
1 OF 1
DRAWING NUMBER
16AGMSAG1
REV
A
© 2008 Barrier Sytems Inc.
The information here on is proprietary to Barrier Systems Inc. shall not be disclosed, duplicated or used otherwise without the express written approval of Barrier Systems Inc.
REV. | CHANGES | DATE | BY | REQD | NEXT ASSY. | ITEM
A | SEE ECN # 1546 | 9/18/10 | SH
0 | NEW DRAWING | 09/24/08 | JR

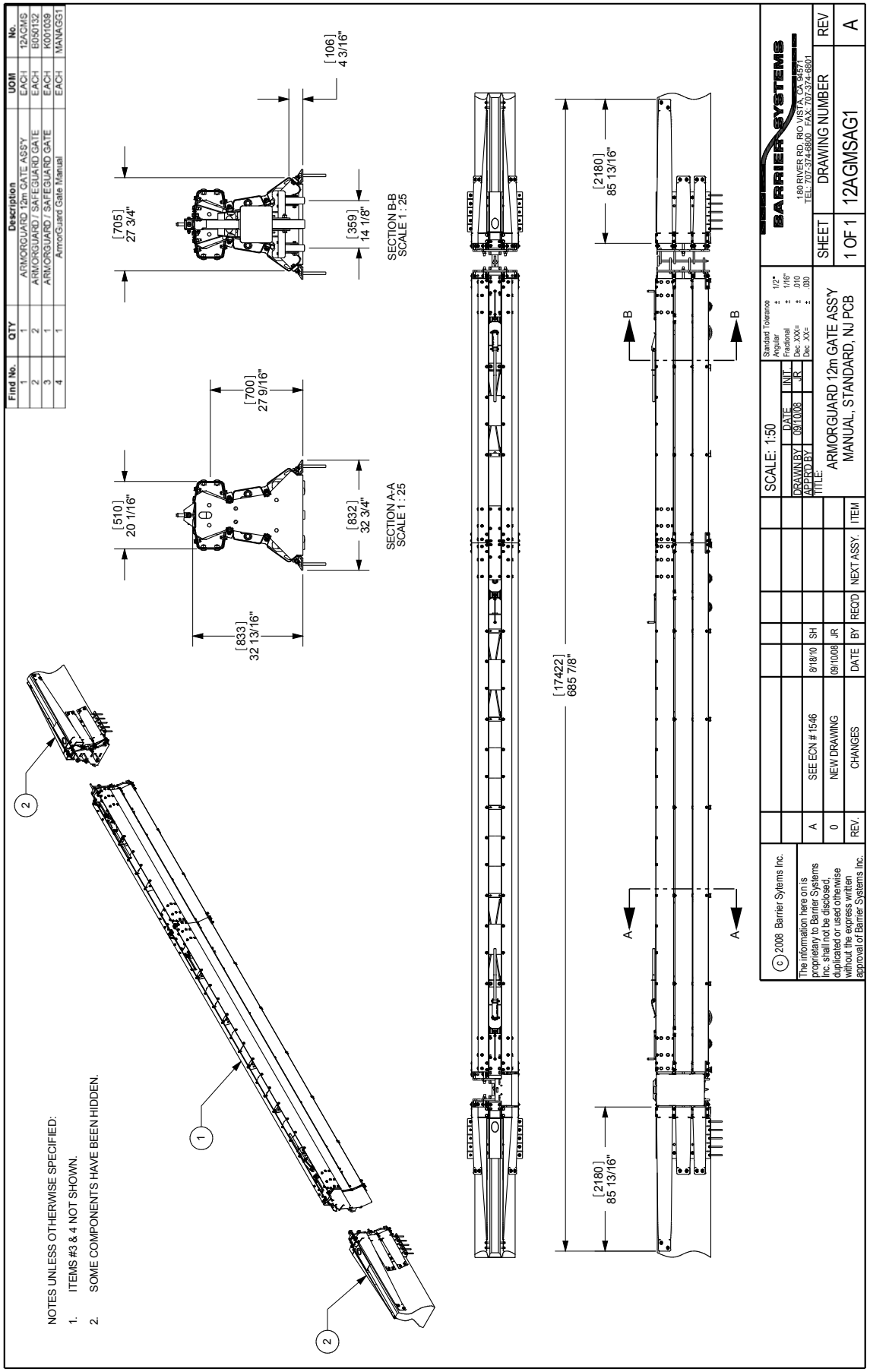
Find No. | QTY | Description | UOM | No.
1 | 1 | ARMORGUARD 12m GATE ASSY | EACH | 12AGMS
2 | 2 | ARMORGUARD / SAFEGUARD GATE | EACH | B050132
3 | 1 | ARMORGUARD / SAFEGUARD GATE | EACH | K001039
4 | 1 | ArmorGuard Gate Manual | EACH | MANAGG1
[705] 27 3/4"
[106] 4 3/16"
[359] 14 1/8"
SECTION B-B SCALE 1 : 25
[700] 27 9/16"
[510] 20 1/16"
[832] 32 3/4"
[833] 32 13/16"
SECTION A-A SCALE 1 : 25
[17422] 685 7/8"
[2180] 85 13/16"
[2180] 85 13/16"
NOTES UNLESS OTHERWISE SPECIFIED:
1. ITEMS #3 & 4 NOT SHOWN.
2. SOME COMPONENTS HAVE BEEN HIDDEN.
SCALE: 1:50
DRAWN BY
APPR'D BY
DATE
09/10/08
INIT.
JR
TITLE:
ARMORGUARD 12m GATE ASSY
MANUAL, STANDARD, NJ PCB
Standard Tolerance
Angular ± 1/2°
Fractional ± 1/16"
Dec. XXX= ± .010
Dec. XX= ± .030
BARRIER SYSTEMS
180 RIVER RD, RIO VISTA, CA 94571
TEL: 707-374-6800 FAX: 707-374-6801
SHEET
1 OF 1
DRAWING NUMBER
12AGMSAG1
REV
A
© 2008 Barrier Sytems Inc.
The information here on is proprietary to Barrier Systems Inc. shall not be disclosed, duplicated or used otherwise without the express written approval of Barrier Systems Inc.
REV. | CHANGES | DATE | BY | REQ'D | NEXT ASSY. | ITEM
A | SEE ECN # 1546 | 8/18/10 | SH
0 | NEW DRAWING | 09/10/08 | JR

Find No.	QTY	Description	UOM	No.
1	1	ARMORGUARD 8m GATE ASS'Y.	EACH	08AGMS
2	2	Safeguard Gate Transition to	EACH	B050133
3	1	ARMORGUARD / SAFEGUARD GATE	EACH	K001039
4	1	ArmorGuard Gate Manual	EACH	MANAGG1

NOTES UNLESS OTHERWISE SPECIFIED:

1. ITEMS #3 & 4 NOT SHOWN.
2. SOME COMPONENTS HAVE BEEN HIDDEN.

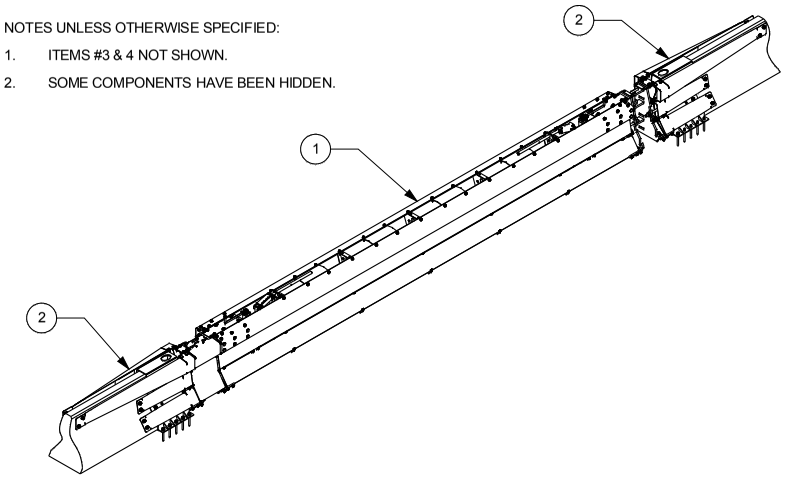

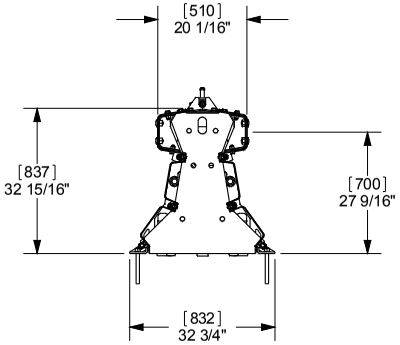

SECTION A-A
SCALE 1 : 25

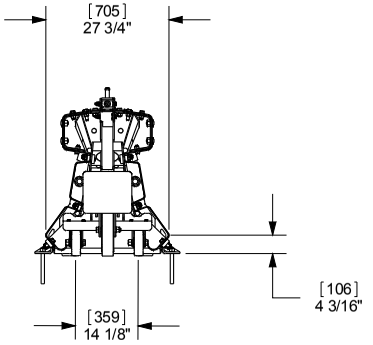

SECTION B-B
SCALE 1 : 25

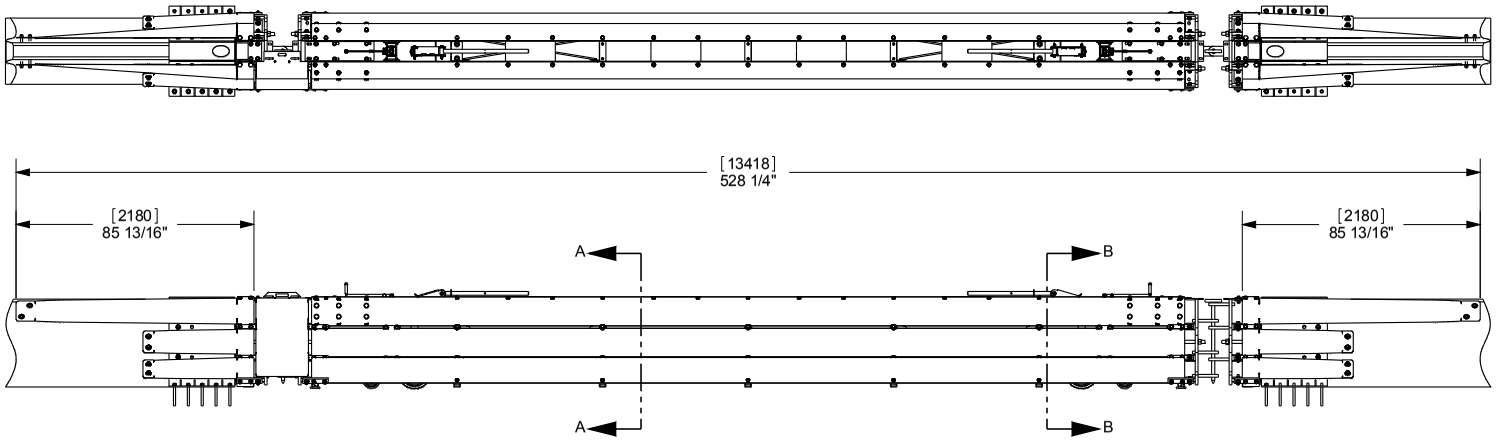

© 2008 Barrier Sytems Inc.

The information here on is proprietary to Barrier Systems Inc. shall not be disclosed, duplicated or used otherwise without the express written approval of Barrier Systems Inc.

REV.	CHANGES	DATE	BY	REQ'D	NEXT ASSY.	ITEM
A	See ECN# 1546	8/17/10	SH			
0	NEW DRAWING	09/05/08	JR			

SCALE: 1:40

	DATE	INT.
DRAWN BY	09/05/08	JR
APPR'D BY		

Standard Tolerance
Angular ± 1/2°
Fractional ± 1/16"
Dec .XXX= ± .010
Dec .XX= ± .030

TITLE:
ARMORGUARD 8m GATE ASS'Y
MANUAL, STANDARD, NJ PCB

BARRIER SYSTEMS
180 RIVER RD, RIO VISTA, CA 94571
TEL: 707-374-6800 FAX: 707-374-6801

SHEET	DRAWING NUMBER	REV
1 OF 1	08AGMSAG1	A

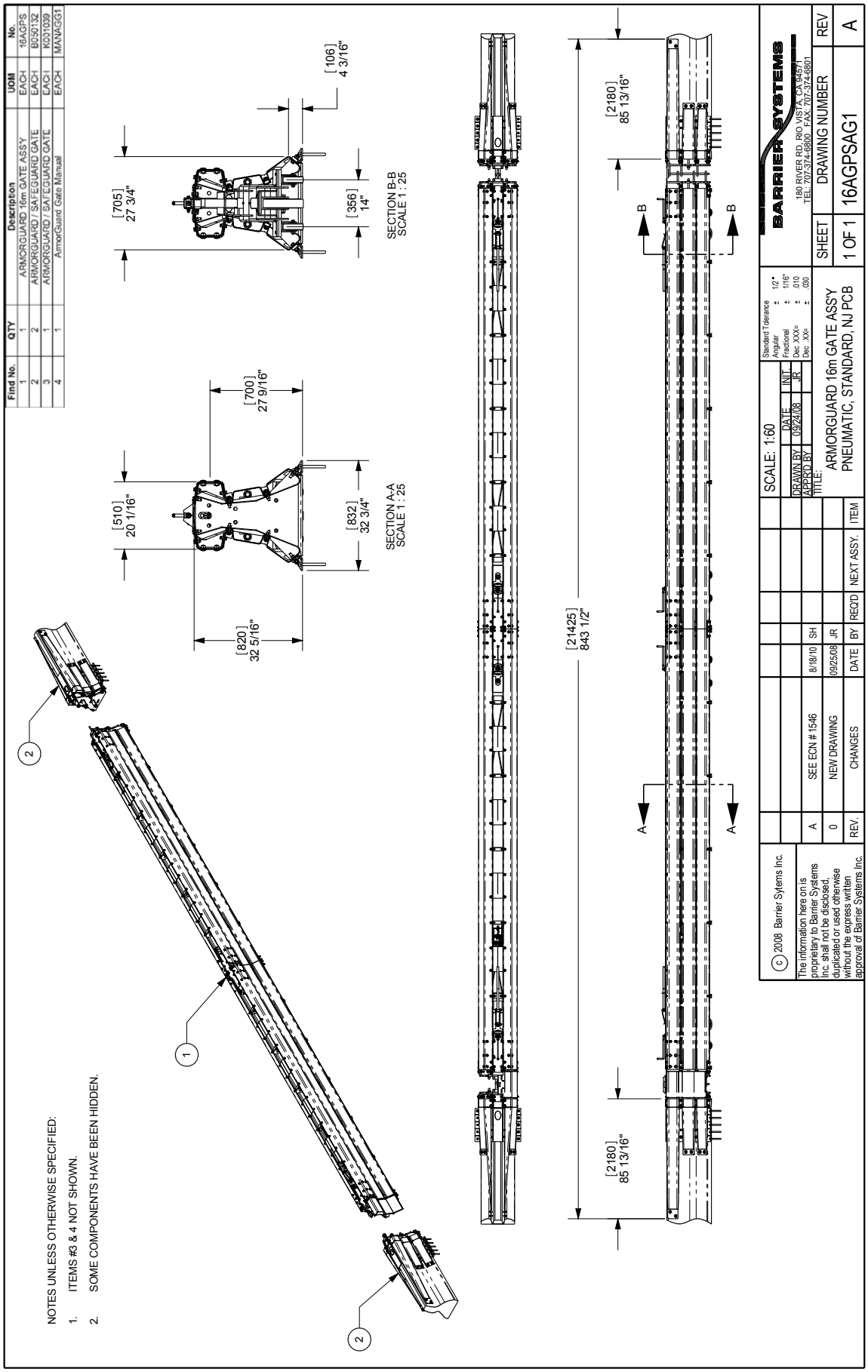
Find No. | QTY | Description | UOM | No.
1 | 1 | ARMORGUARD 16m GATE ASSY | EACH | 16AGPS
2 | 2 | ARMORGUARD / SAFEGUARD GATE | EACH | B030132
3 | 1 | ARMORGUARD / SAFEGUARD GATE | EACH | K031039
4 | 1 | ArmorGuard Gate Manual | EACH | MANAGG1
[705] 27 3/4"
[106] 4 3/16"
[356] 14"
SECTION B-B SCALE 1 : 25
[700] 27 9/16"
[510] 20 1/16"
[832] 32 3/4"
[820] 32 5/16"
SECTION A-A SCALE 1 : 25
[21425] 843 1/2"
[2180] 85 13/16"
[2180] 85 13/16"
A
B
NOTES UNLESS OTHERWISE SPECIFIED:
1. ITEMS #3 & 4 NOT SHOWN.
2. SOME COMPONENTS HAVE BEEN HIDDEN.
SCALE: 1:60
DRAWN BY
APPRD BY
DATE
09/24/08
INIT
JR
TITLE:
ARMORGUARD 16m GATE ASSY
PNEUMATIC, STANDARD, NJ PCB
Standard Tolerance
Angular ± 1/2°
Fractional ± 1/16"
Dec .XXX± ± .010
Dec .XX± ± .030
BARRIER SYSTEMS
180 RIVER RD, RIO VISTA, CA 94571
TEL: (707) 374-6800 FAX: (707) 374-6801
SHEET
1 OF 1
DRAWING NUMBER
16AGPSAG1
REV
A
© 2008 Barrier Sytems Inc.
The information here on is proprietary to Barrier Systems Inc. shall not be disclosed, duplicated or used otherwise without the express written approval of Barrier Systems Inc.
REV. | CHANGES | DATE | BY | REQ'D | NEXT ASSY. | ITEM
A | SEE ECN # 1546 | 8/18/10 | SH
0 | NEW DRAWING | 09/25/08 | JR

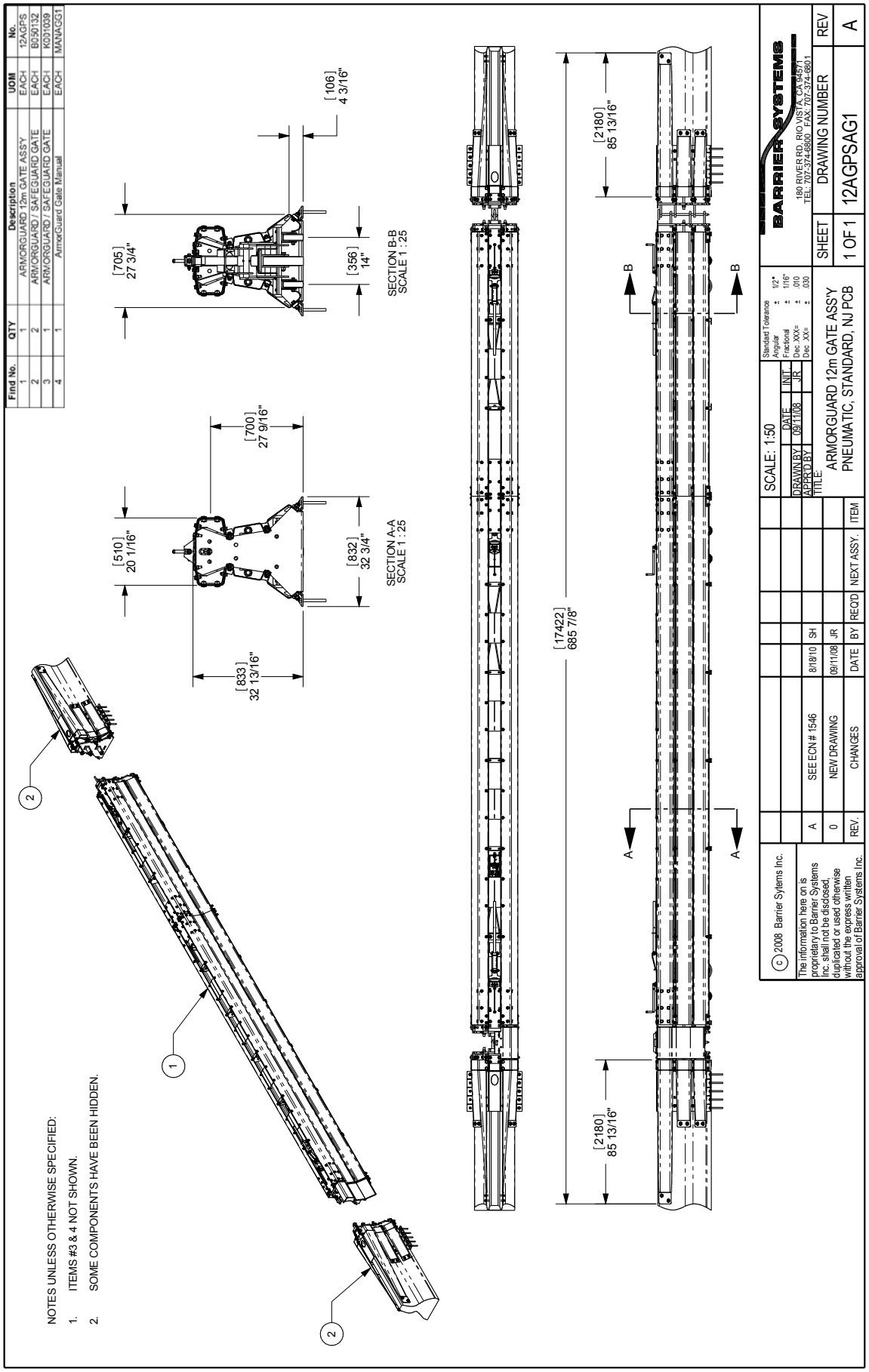
Find No. | QTY | Description | UOM | No.
1 | 1 | ARMORGUARD 12m GATE ASSY | EACH | 12AGPS
2 | 2 | ARMORGUARD / SAFEGUARD GATE | EACH | B050132
3 | 1 | ARMORGUARD / SAFEGUARD GATE | EACH | K091039
4 | 1 | ArmorGuard Gate Manual | EACH | MANAGG1
[705] 27 3/4"
[106] 4 3/16"
[356] 14"
SECTION B-B SCALE 1 : 25
[700] 27 9/16"
[510] 20 1/16"
[832] 32 3/4"
[833] 32 13/16"
SECTION A-A SCALE 1 : 25
[17422] 685 7/8"
[2180] 85 13/16"
[2180] 85 13/16"
NOTES UNLESS OTHERWISE SPECIFIED:
1. ITEMS #3 & 4 NOT SHOWN.
2. SOME COMPONENTS HAVE BEEN HIDDEN.
SCALE: 1:50
DRAWN BY
APPR'D BY
TITLE:
DATE
09/11/08
JNT
JR
ARMORGUARD 12m GATE ASS'Y
PNEUMATIC, STANDARD, NJ PCB
Standard Tolerance
Angular ± 1/2°
Fractional ± 1/16"
Dec. XXX= ± .010
Dec. XX= ± .030
BARRIER SYSTEMS
180 RIVER RD, RIO VISTA, CA 94571
TEL: 707-374-6800 FAX: 707-374-6811
SHEET
1 OF 1
DRAWING NUMBER
12AGPSAG1
REV
A
© 2008 Barrier Systems Inc.
The information here on is proprietary to Barrier Systems Inc. shall not be disclosed, duplicated or used otherwise without the express written approval of Barrier Systems Inc.
REV. | CHANGES | DATE | BY | REQ'D | NEXT ASSY. | ITEM
A | SEE ECN # 1546 | 8/18/10 | SH
0 | NEW DRAWING | 09/11/08 | JR

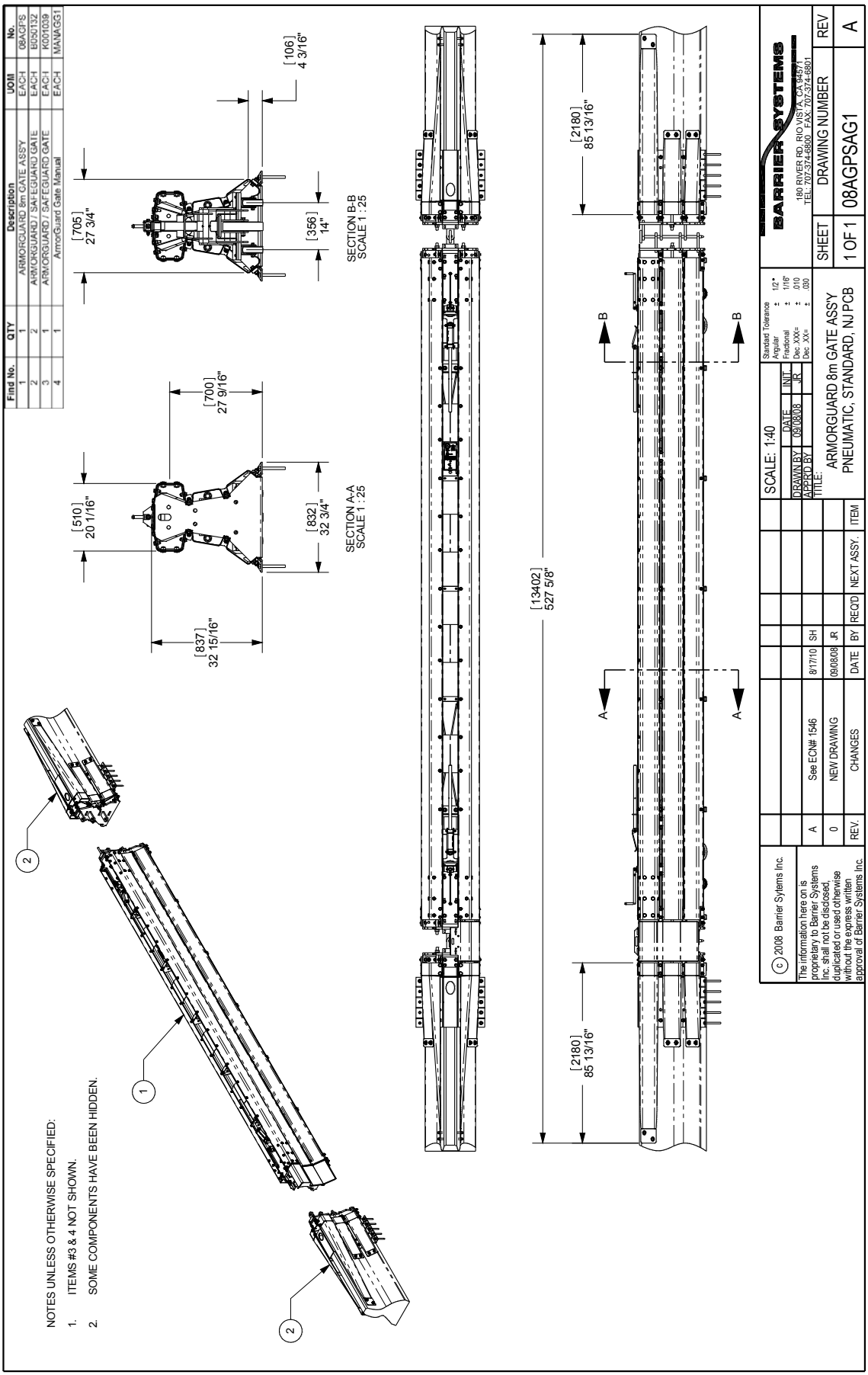
Find No. | QTY | Description | UOM | No.
1 | 1 | ARMORGUARD 8m GATE ASSY | EACH | 08AGPS
2 | 2 | ARMORGUARD / SAFEGUARD GATE | EACH | BG50132
3 | 1 | ARMORGUARD / SAFEGUARD GATE | EACH | K001039
4 | 1 | ArmorGuard Gate Manual | EACH | MANAG51
[106] 4 3/16"
[705] 27 3/4"
[356] 14"
SECTION B-B SCALE 1 : 25
[700] 27 9/16"
[510] 20 1/16"
[832] 32 3/4"
[837] 32 15/16"
SECTION A-A SCALE 1 : 25
[13402] 527 5/8"
[2180] 85 13/16"
[2180] 85 13/16"
NOTES UNLESS OTHERWISE SPECIFIED:
1. ITEMS #3 & 4 NOT SHOWN.
2. SOME COMPONENTS HAVE BEEN HIDDEN.
SCALE: 1:40
DRAWN BY JR 09/08/08
APPRD BY
TITLE: ARMORGUARD 8m GATE ASSY PNEUMATIC, STANDARD, NJ PCB
Standard Tolerance Angular ± 1/2° Fractional ± 1/16" Dec. XXX± ± .010 Dec. XX± ± .030
BARRIER SYSTEMS
180 RIVER RD, RIO VISTA, CA 94571 TEL: 707-374-6800 FAX: 707-374-6801
SHEET 1 OF 1
DRAWING NUMBER 08AGPSAG1
REV A
© 2008 Barrier Sytems Inc.
The information here on is proprietary to Barrier Systems Inc. shall not be disclosed, duplicated or used otherwise without the express written approval of Barrier Systems Inc.
REV. | CHANGES | DATE | BY | REQ'D | NEXT ASSY. | ITEM
A | See ECN# 1546 | 8/17/10 | SH
0 | NEW DRAWING | 09/08/08 | JR

NOTES:

1. ITEMS 19-22 NOT SHOWN.
2. USE 8 OF ITEM 13 & 14 AND 16 OF ITEM 15 TO MOUNT ITEMS 19-22.

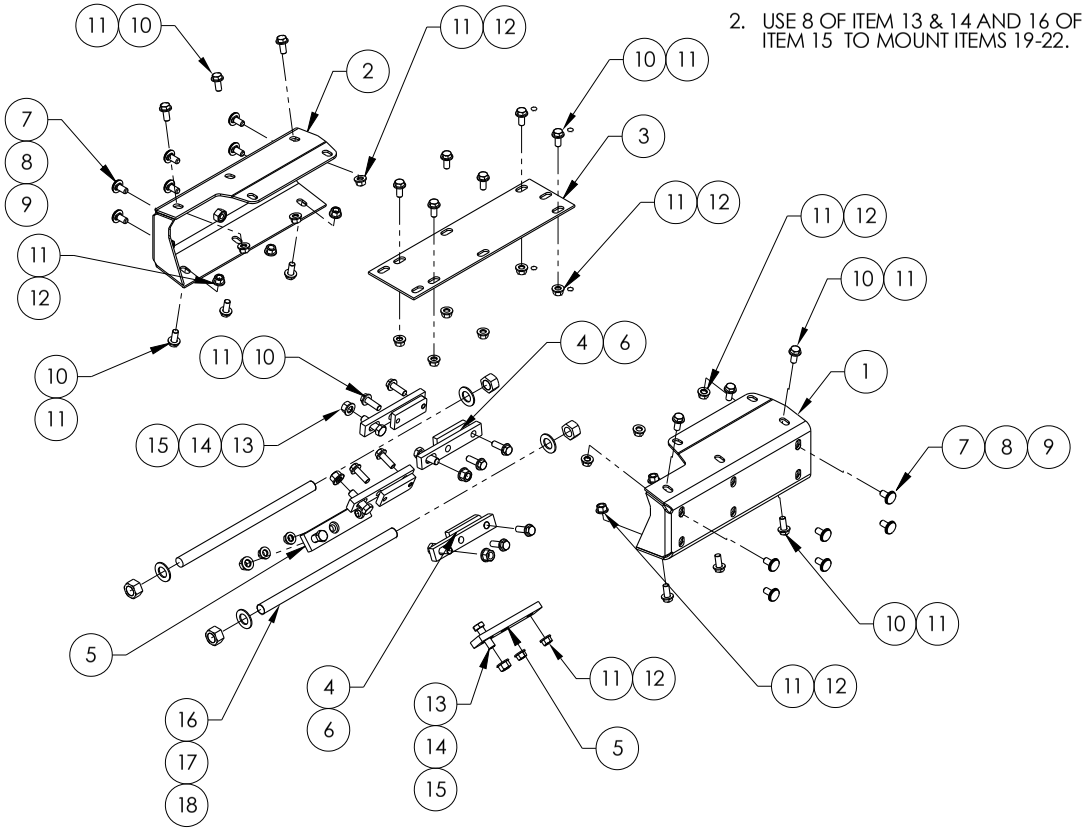

Item	Qty	Part Description	Part#	UM
1	1.00	Sfg Top Panel End Cap Right	B020510	EACH
2	1.00	Sfg Top Panel End Cap Left	B020511	EACH
3	1.00	Sfg Hinge Mount Shear Plate Ad	B020513	EACH
4	4.00	Sfg Upper Mount Strap Adjustab	B020514	EACH
5	2.00	Sfg Bottom Mount Strap Adjusta	B020515	EACH
6	4.00	Sfg Threaded Backing Plate Dom	B020703	EACH
7	12.00	Guardrail Bolt 5/8-11x1 1/4 G	4001115	EACH
8	12.00	Sfg Rd Washr Guardrail Bolt Slo	A020718	EACH
9	12.00	Guardrail Nut Recessed 5/8-11	4001116	EACH
10	26.00	C-SCR HH 5/8-11x2 Gr2 Gal	2001205	EACH
11	48.00	Washr 5/8 F436 Struct Galv	2000118	EACH
12	22.00	Nut HN 5/8-11 A563 Gr2 Gal	2000134	EACH
13	14.00	C-SCR HH 3/4-10x2 3/4 A325 Gal	2001598	EACH
14	14.00	Hex Nut 3/4-10 Hvy Gr2 Galv	2001599	EACH
15	14.00	Washr 3/4 F436 Flat Rd Struct G	2001580	EACH
16	2.00	Sfg Threaded Connecting Rod Do	B020226	EACH
17	4.00	Hex Nut 1 1/8-7 Oversized Gr2	2001404	EACH
18	4.00	Washr USS 1 1/8 Gal	2001405	EACH
19	1.00	Sfg Top Adjustment Plt	B020540	EACH
20	1.00	Sfg Top Adj Leg rev "A"	B020541	EACH
21	1.00	Sfg Mid Adj Leg rev "A"	B020543	EACH
22	1.00	Sfg Btm Adjustment Leg	B020545	EACH

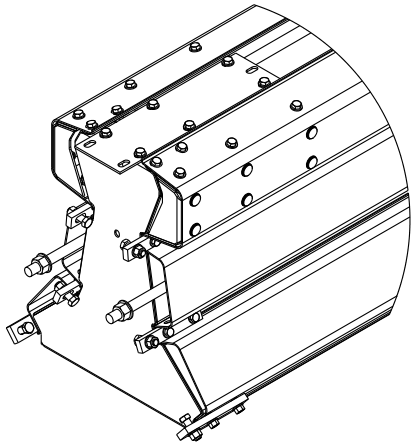

© 2005 Barrier Sytems Inc.

The information heron is proprietary to Barrier Systems Inc. shall not be disclosed, duplicated or used otherwise without the express written approval of Barrier Systems Inc.

REV.	CHANGES	DATE	BY	REQ'D	NEXT ASSY.	ITEM
E	CHANGED TITLE	9/5/08	JR			
D	SEE ECN 00694	10/4/05	CMB			
C	SEE ECN 00664	5/25/05	CMB			

SCALE: 1:12

	DATE	INIT.
DRAWN BY	5/12/05	CMB
		GAD

Standard Tolerance
Angular +/- 1/2 Deg.
Fractional +/- 1/16
Dec. XXX= +/- .010
Dec. .XX= +/- .030

TITLE: HINGE MOUNT SET, ARMORGUARD / SAFEGUARD

MODEL	DRAWING NUMBER	REV
	B010342	E

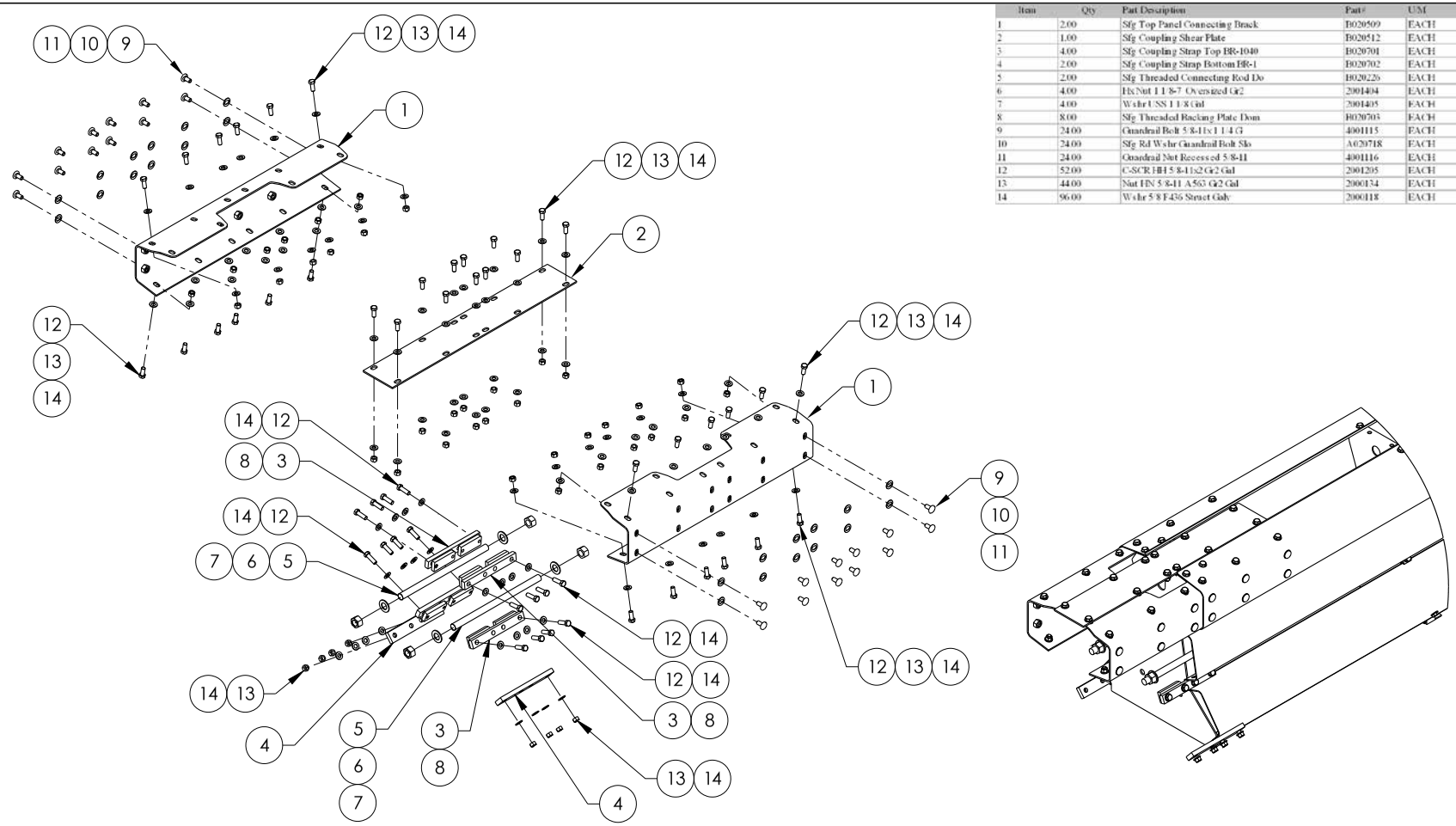

Item	Qty	Part Description	Part#	UM
1	2.00	Sfg Top Panel Connecting Brack	B020509	EACH
2	1.00	Sfg Coupling Shear Plate	B020512	EACH
3	4.00	Sfg Coupling Strap Top BR-1040	B020701	EACH
4	2.00	Sfg Coupling Strap Bottom BR-1	B020702	EACH
5	2.00	Sfg Threaded Connecting Rod Do	B020226	EACH
6	4.00	Hx Nut 1 1/8-7 Oversized Gr2	2001404	EACH
7	4.00	Wshr USS 1 1/8 Gal	2001405	EACH
8	8.00	Sfg Threaded Backing Plate Dom	B020703	EACH
9	24.00	Guardrail Bolt 5/8-11x1 1/4 G	4001115	EACH
10	24.00	Sfg Rd Wshr Guardrail Bolt Slo	A020718	EACH
11	24.00	Guardrail Nut Recessed 5/8-11	4001116	EACH
12	52.00	C-SCR HH 5/8-11x2 Gr2 Gal	2001205	EACH
13	44.00	Nut HN 5/8-11 A563 Gr2 Gal	2000134	EACH
14	96.00	Wshr 5/8 F436 Struct Galv	2000118	EACH

© 2005 Barrier Sytems Inc.

The information heron is proprietary to Barrier Systems Inc. shall not be disclosed, duplicated or used otherwise without the express written approval of Barrier Systems Inc.

REV.	CHANGES	DATE	BY	REQ'D	NEXT ASSY.	ITEM
D	CHANGED TITLE	10/22/08	JR			
C	SEE ECN 00664	5/25/05	CMB			

SCALE: 1:16

	DATE	INIT.
DRAWN BY	5/11/05	CMB
		GAD

Standard Tolerance
Angular +/- 1/2 Deg.
Fractional +/- 1/16
Dec. XXX= +/- .010
Dec. XX= +/- .030

TITLE:
COUPLING SET, 4 METER SECTION, ARMORGUARD / SAFEGUARD

MODEL	DRAWING NUMBER	REV
	B010343	D

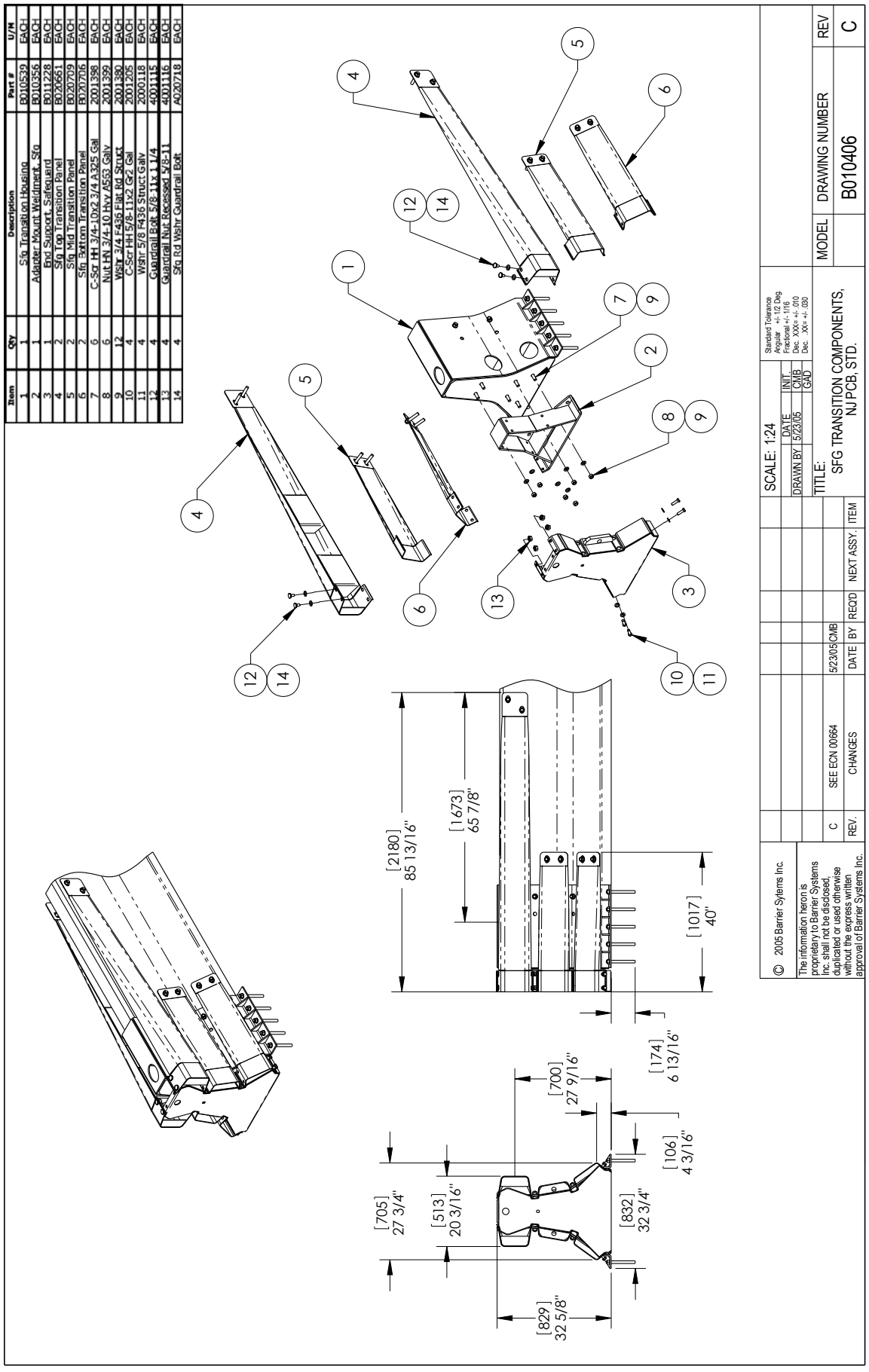
Item Qty Description Part # U/M
1 1 Sfg Transition Housing B010539 EACH
2 1 Adapter Mount Weldment, Sfg B010356 EACH
3 1 End Support, Safeguard B011228 EACH
4 2 Sfg Top Transition Panel B020661 EACH
5 2 Sfg Mid Transition Panel B020709 EACH
6 2 Sfg Bottom Transition Panel B020706 EACH
7 6 C-Scr HH 5/8-11x2 Gr2 Gal 2001205 EACH
8 6 Nut HN 3/4-10 Hvy A563 Galv 2001399 EACH
9 12 Wshr 3/4 F436 Flat Rd Struct 2001380 EACH
10 4 C-Scr HH 3/4-10x2 3/4 A325 Gal 2001398 EACH
11 4 Wshr 5/8 F436 Struct Galv 2000118 EACH
12 4 Guardrail Bolt, 5/8-11x 1 1/4 4001115 EACH
13 4 Guardrail Nut, Recessed 5/8-11 4001116 EACH
14 4 Sfg Rd Wshr Guardrail Bolt A020718 EACH
[2180] 85 13/16"
[1673] 65 7/8"
[1017] 40"
[174] 6 13/16"
[700] 27 9/16"
[106] 4 3/16"
[705] 27 3/4"
[513] 20 3/16"
[832] 32 3/4"
[829] 32 5/8"
SCALE: 1:24
DRAWN BY DATE INIT.
5/23/05 CMB
GAD
Standard Tolerance
Angular +/- 1/2 Deg
Fractional +/- 1/16
Dec. XXX= +/- .010
Dec. XX= +/- .030
TITLE:
SFG TRANSITION COMPONENTS, NJ PCB, STD.
MODEL
DRAWING NUMBER
B010406
REV
C
© 2005 Barrier Syterms Inc.
The information heron is proprietary to Barrier Systems Inc. shall not be disclosed, duplicated or used otherwise without the express written approval of Barrier Systems Inc.
REV. CHANGES DATE BY REQD NEXT ASSY. ITEM
C SEE ECN 00664 5/23/05 CMB

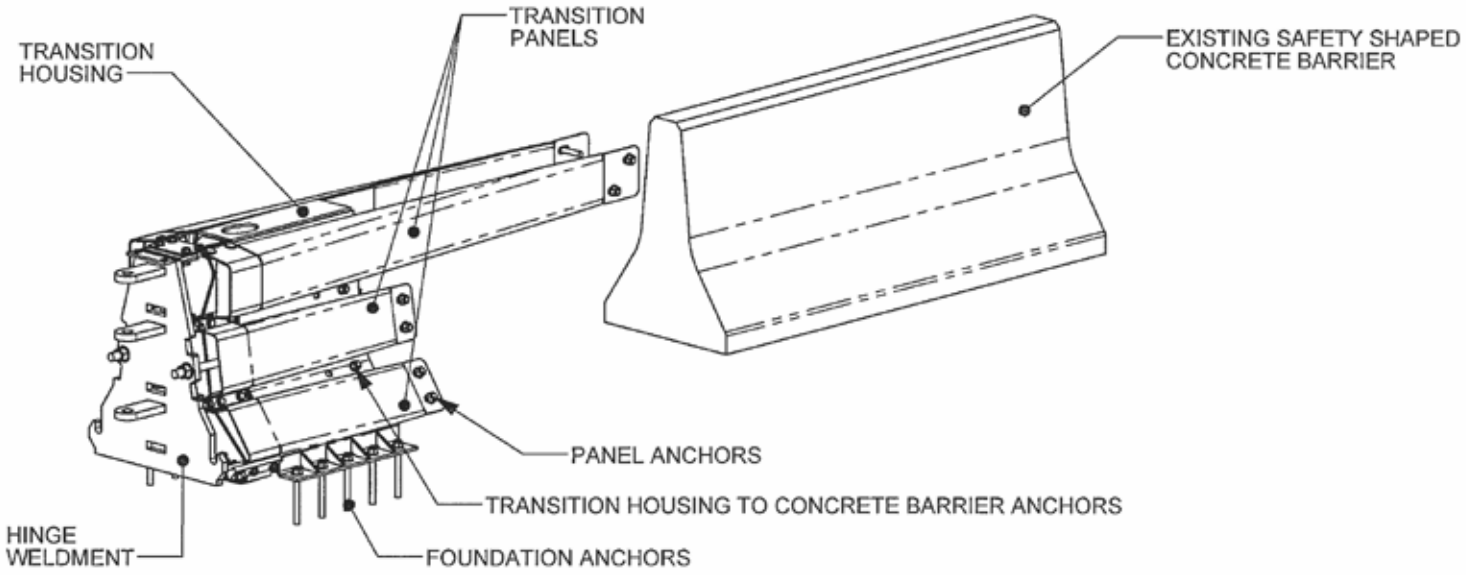

ASSEMBLED TRANSITION INSTALLATION PROCEDURE:

1.) SLIDE ASSEMBLY OVER EXISTING SAFETY SHAPED CONCRETE BARRIER. TRANSITION HOUSING MUST OVERLAP BARRIER AT LEAST 6" [150 mm]. PLACE BOTH TRANSITION ASSEMBLIES IN PLACE.
2.) POSITION GATE ASSEMBLY BETWEEN THE TRANSITIONS PLACED ON CONCRETE BARRIERS.
3.) ALIGN THE HINGES ON THE GATE WITH THE TRANSITIONS AND CENTER THE MASTER PIN IN THE SLOTS ON THE HINGE WELDMENTS. THE TRANSITIONS ARE ADJUSTED BY SLIDING THEM LONGITUDINALLY ON THE CONCRETE BARRIER. MAKE SURE THE PINS ALIGN VERTICALLY ALSO.
4.) ANCHOR ALL OF THE TRANSITION'S PANELS AS SHOWN WITH THE ANCHORING PACKAGE PROVIDED. ANCHOR THE TRANITION HOUSING TO THE FOUNDATION AND TO THE CONCRETE BARRIER. ONLY TWO ANCHORS ARE NECESSARY FOR ANCHORING THE TRANSITION HOUSING TO THE CONRETE BARRIER PER SIDE.
5.) THE HINGE ATTACHMENT HARDWARE PROVIDE ADDITIONAL ADJUSTMENTS AFTER THE TRANSITION IS ANCHORED IF NECESSARY.

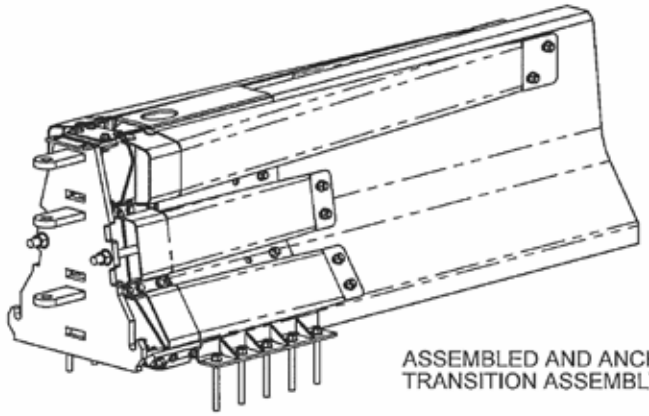

ASSEMBLED AND ANCHORED TRANSITION ASSEMBLY

REV.	CHANGES	DATE	BY	REQ'D	NEXT ASSY.	ITEM

SCALE: 1:25

	DATE	INIT.
DRAWN BY	3/19/07	GAD
APPR'D BY		

Standard Tolerance
Angular ± 1/2°
Fractional ± 1/16"
Dec .XXX= ± .010
Dec .XX= ± .030

TITLE: TRANSITION INSTALLATION INSTRUCTIONS, ASSEMBLED TRANSITION, SG-GATE

BARRIER SYSTEMS INC
180 RIVER RD, RIO VISTA, CA 94571
TEL: 707-374-6800 FAX: 707-374-6801

SHEET	DRAWING NUMBER	REV.
1 OF 1	INSTALLATION DOC	

APPENDIX D
Maintenance

Periodic Maintenance

The ArmorGuard Gate System has been designed to minimize the need for periodic maintenance. The only periodic maintenance items that need to be addressed are as follows:

- Apply grease (Chevron EP NLGI 2 grease or equivalent) to the zerk fittings on the caster wheels at least annually.
- If the system is supplied with an onboard air tank, the air pressure should be checked at least monthly to ensure that adequate pressure is available to operate the system.

General Inspection and Maintenance

Drive-by Inspection

Drive-by type inspections should be performed at least monthly. The purpose of the drive-by inspection is to observe for the following characteristics:

- Any evidence of vehicle impacts.
- Structural damage.
- Loose or out of place components.
- Excessive debris build-up that would not allow the system to be operated.

If any of these conditions are observed, a walk-up inspection is required.

Walk-up Inspections

Walk-up inspections should be conducted at least annually and whenever deemed appropriate from a drive-by inspection. A walk-up inspection should consist of the following items:

- Structural components – Conduct an inspection of all structural assemblies to ensure that all components are structurally sound, properly connected and there are no loose fasteners or damaged components. The hinge pins should be in position and free to move and the hinge covers properly fitted and connected. Any components observed to be non-conforming to the manufacturer's drawings should be replaced or repaired.
- Operating systems – Raise, hold, and lower the system in accordance with the operating instructions and ensure that the hinge covers, hinge pins, valves, pneumatic system, casters and other functional components operate in the proper manner. Any components observed to be deficient should be repaired or replaced in accordance with the manufacturer's instructions.
- General cleaning – The area around and within the internal and external operating area should be kept free of debris that could affect either the impact performance or restrict the ability to open or close the system when needed.

For additional information regarding this product, please contact:

Lindsay Transportation Solutions Sales and Services, Inc
Customer Service Department
180 River Road
Rio Vista, CA 94571

U.S. Toll Free (888) 800-3691
Phone: (707) 374-6800
Fax: (707) 374-6801

Page Left Intentionally Blank

LINDSAY™ TRANSPORTATION SOLUTIONS | BARRIER SYSTEMS® BY LINDSAY | RAILROAD PRODUCTS BY LINDSAY | SNOLINE™ BY LINDSAY

Lindsay Transportation Solutions Sales and Services, Inc
180 River Road • Rio Vista, CA 94571 • +1 707.374.6800 U.S. Toll Free: 888.800.3691 • www.barrriersystemsinc.com

Installation manual details for the ArmorGuard Gate System are subject to change without notice to reflect improvements and upgrades.
Additional information is available from Barrier Systems Sales and Service © Lindsay Transportation Solutions

ARMORGUARD PERM GATE 061207